A Fast and Efficient Computational Framework for Large-Scale NMPC

Victor M. Zavala, Carl D. Laird and Lorenz T. Biegler

Department of Chemical Engineering
Carnegie Mellon University
Pittsburgh, PA 15213

vzavala@cmu.edu

http://dynopt.cheme.cmu.edu

2006 AIChE Annual Meeting
San Francisco, CA

Carnegie Mellon

CAPD CENTER

Nonlinear Model Predictive Control

ExxonMobil -Bartusiak 2001, 2006-, BASF –Nagy 2006-, ABB –Franke 2006-, Honeywell, PAS

Nonlinear Model Predictive Control

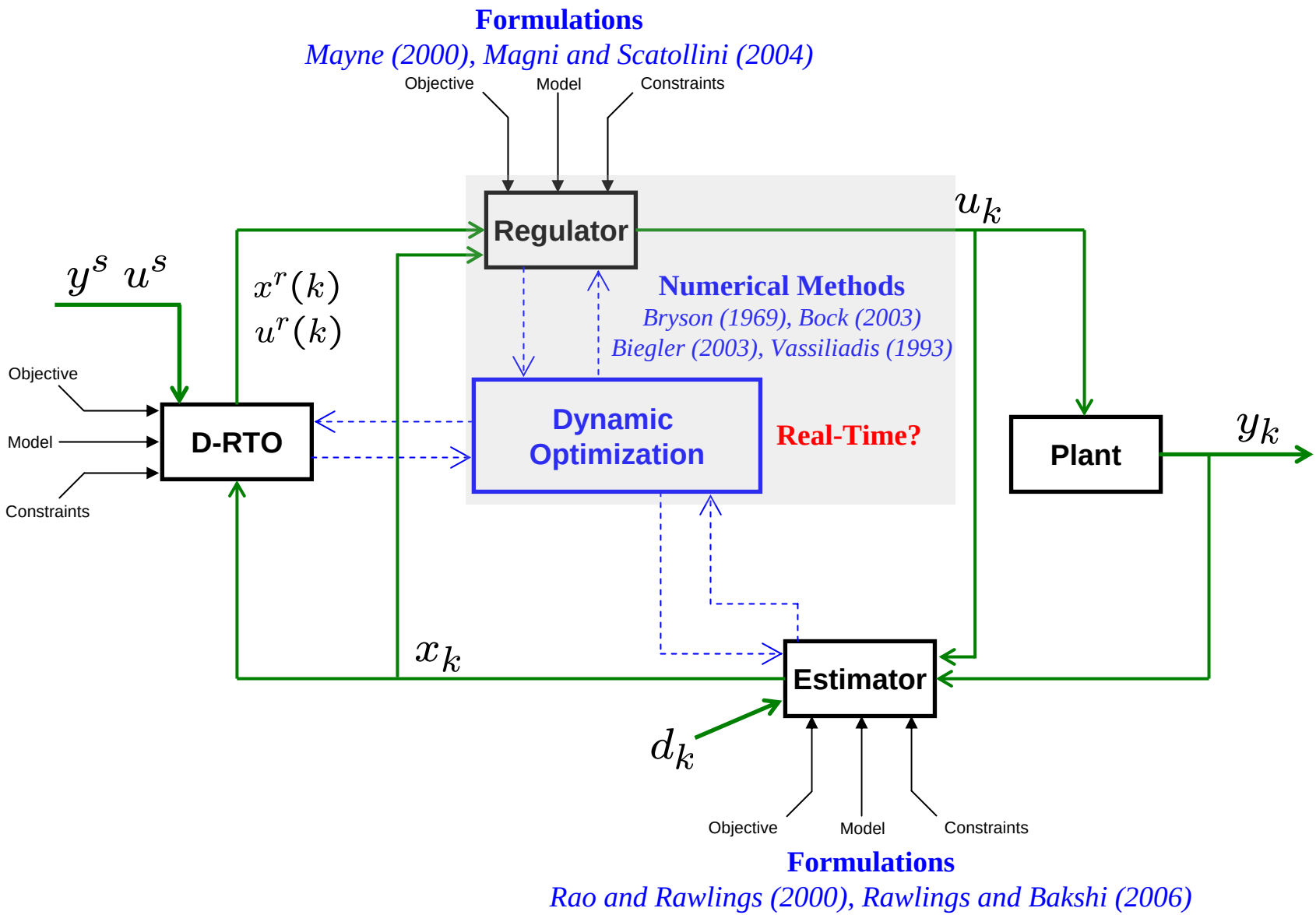

Nonlinear Model Predictive Control

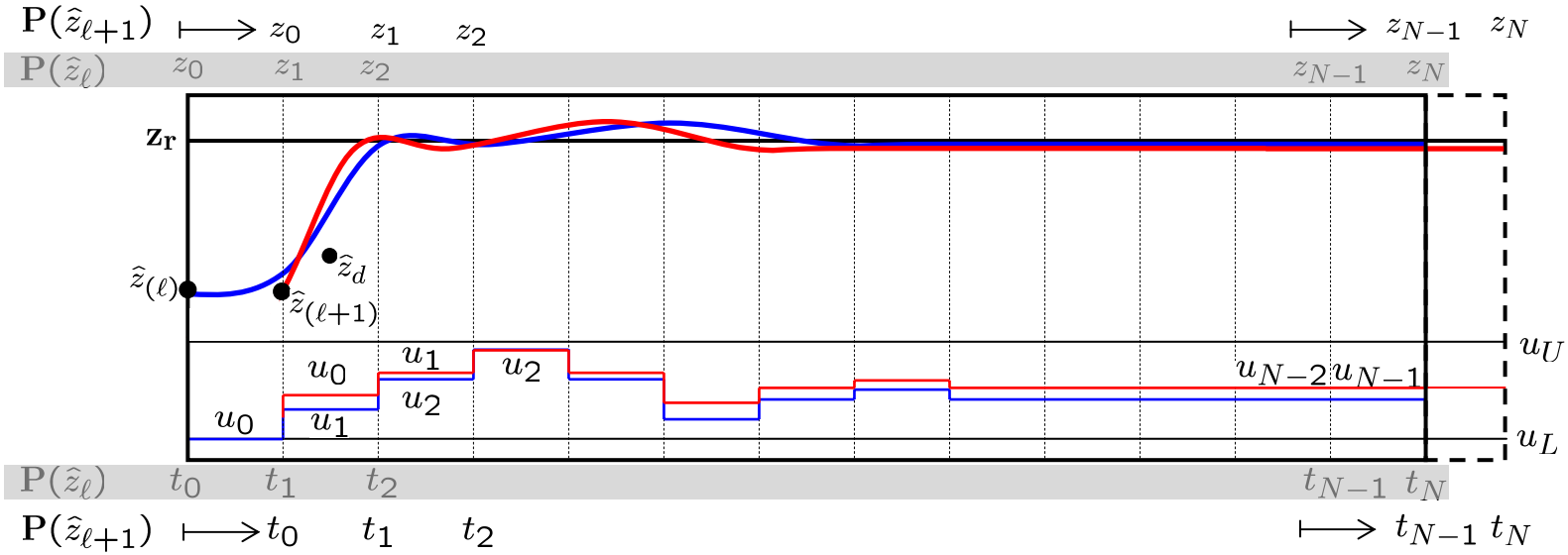

$$
\begin{aligned}
\min_{u(\cdot),\pi,\Pi} \quad & \int_{t_0}^{t_f} \varphi\left(z(t), y(t), u(t), \pi, \Pi\right) dt \\
\text{s.t.} \quad & \\
\frac{dz}{dt} &= f\left(z(t), y(t), u(t), \pi, \Pi\right) \\
0 &= g\left(z(t), y(t), u(t), \pi, \Pi\right) \\
\boxed{z_0(t_0) = \hat{z}(\ell)} & \\
z^L \leq z(t) &\leq z^U \\
y^L \leq y(t) &\leq y^U \\
u^L \leq u(t) &\leq u^U
\end{aligned}
\qquad \mathbf{P}(\hat{z}_\ell)
$$

$$
\begin{aligned}
\min_{u(\cdot),\pi,\Pi} \quad & \int_{t_0}^{t_f} \varphi\left(z(t), y(t), u(t), \pi, \Pi\right) dt \\
\text{s.t.} \quad & \\
\frac{dz}{dt} &= f\left(z(t), y(t), u(t), \pi, \Pi\right) \\
0 &= g\left(z(t), y(t), u(t), \pi, \Pi\right) \\
\boxed{z_0(t_0) = \hat{z}(\ell+1)} & \\
z^L \leq z(t) &\leq z^U \\
y^L \leq y(t) &\leq y^U \\
u^L \leq u(t) &\leq u^U
\end{aligned}
\qquad \mathbf{P}(\hat{z}_{\ell+1})
$$

Challenges

Large-Scale Models

Real-Time Solutions – Stability

Santos et.al. (2000), Findeisen et. al. (2004)

Real-Time NMPC

Real-Time Nonlinear Model Predictive Control

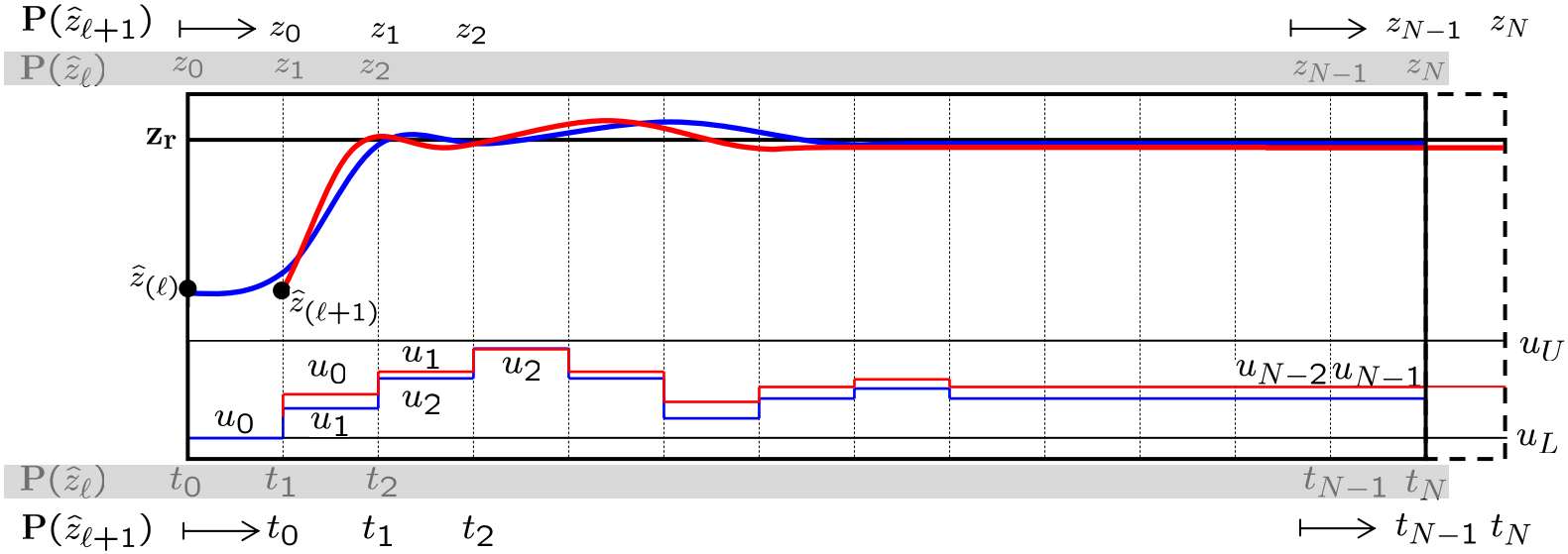

$$\min_{u(\cdot),\pi,\Pi} \int_{t_0}^{t_f} \varphi\left(z(t), y(t), u(t), \pi, \Pi\right) dt$$

s.t.

$$\begin{aligned} \frac{dz}{dt} &= f\left(z(t), y(t), u(t), \pi, \Pi\right) \\ 0 &= g\left(z(t), y(t), u(t), \pi, \Pi\right) \\ \boxed{z_0(t_0) = \hat{z}(\ell)} \end{aligned} \qquad \mathbf{P}(\hat{z}_\ell)$$

Parametric Dynamic Optimization

$$\min_{u(\cdot),\pi,\Pi} \int_{t_0}^{t_f} \varphi\left(z(t), y(t), u(t), \pi, \Pi\right) dt$$

s.t.

$$\begin{aligned} \frac{dz}{dt} &= f\left(z(t), y(t), u(t), \pi, \Pi\right) \\ 0 &= g\left(z(t), y(t), u(t), \pi, \Pi\right) \\ \boxed{z_0(t_0) = \hat{z}(\ell+1)} \end{aligned} \qquad \mathbf{P}(\hat{z}_{\ell+1})$$

Synchronize Computation-Dynamics

1) Preparation – Off-line Nominal Problem

2) Feedback – On-line Fast Correction

Previous Work – Multiple Shooting *Diehl et. al. (2001),* **Sequential** *Marquardt, et. al. (2004), Guay, et. al. (2006)*

This Work – Simultaneous Collocation Approach

Large-Scale Dynamic Optimization

Simultaneous Collocation Approach

$$\min_{u(\cdot),\pi,\Pi} \int_{t_0}^{t_f} \varphi\left(z(t),y(t),u(t),\pi,\Pi\right) dt$$

s.t.

$$\begin{aligned}
\frac{dz}{dt} &= f\left(z(t),y(t),u(t),\pi,\Pi\right)\\
0 &= g\left(z(t),y(t),u(t),\pi,\Pi\right)\\
z_0(t_0) &= \hat{z}(\ell)\\
z^L &\le z(t) \le z^U\\
y^L &\le y(t) \le y^U\\
u^L &\le u(t) \le u^U
\end{aligned}$$

DynOpt

$$\longleftrightarrow$$

$$\min \sum_{m=0}^{M-1}\left\{\sum_{k=0}^{K_m-1}\varphi_m^k\left(z_m^k,y_m^k,u_m^k,\pi_m,\Pi\right)+E_m\left(z_m^{K_m},y_m^{K_m},u_m^{K_m},\pi_m,\Pi\right)\right\}$$

s.t.

$$\begin{aligned}
z_m^{k+1} &= z_m^k + \mathbf{A}_m y_m^k\\
0 &= h_{m,k}\left(z_m^k,y_m^k,u_m^k,\pi_m,\Pi\right)\\
z_{m+1}^0 &= \bar{f}_m\left(z_m^{K_m},y_m^{K_m},u_m^{K_m}\right)\\
z_0^0 &= \hat{z}(\ell) = p_0\\
m &= 0,\ldots,M-1 \qquad k=0,\ldots,K_m-1
\end{aligned}$$

NLP

Favorable Computational Complexity over Sequential & Multiple-Shooting Approaches *–Z, et.al. 2006-*

Interior-Point Algorithms – IPOPT *(Wächter & Biegler 2006)*

$$\begin{aligned}
\min\quad & f(x)\\
\text{s.t.}\quad & c(x)=0\\
& x \ge 0
\end{aligned}
\quad\longrightarrow\quad
\begin{aligned}
\min\quad & f(x) - \mu_\ell \sum_{i=1}^{nx} \ln\left(x^{(i)}\right)\\
\text{s.t.}\quad & c(x)=0
\end{aligned}$$

Main Idea: Solve Sequence with $\mu_\ell \to 0$

Expensive Factorization of Sparse KKT Matrix

$$\begin{aligned}
\nabla_x f(x) + \nabla_x c(x)\,\lambda - \nu &= 0\\
c(x) &= 0\\
XVe - \mu e &= 0
\end{aligned}
\xrightarrow{\text{Newton's Method}}
\begin{bmatrix} W(x_k,\lambda_k) & A(x_k) & -I\\ A(x_k)^T & 0 & 0\\ V_k & 0 & X_k \end{bmatrix}
\begin{bmatrix} \Delta x\\ \Delta\lambda\\ \Delta\nu \end{bmatrix}
= -\begin{bmatrix} \nabla f(x_k)+A(x_k)\lambda_k-\nu_k\\ c(x_k)\\ X_kV_ke-\mu_\ell e \end{bmatrix}$$

Robust Globalization Strategies, Decomposable Structures

NLP Sensitivity

$$\left.\begin{array}{ll} \min & f(x,p) \\ \text{s.t.} & c(x,p) = 0 \\ & x \geq 0 \end{array}\right\} \mathbf{P}(p)$$

Solution Triplet

$$s^*(p)^T = [x^{*T}\ \lambda^{*T}\ \nu^{*T}]$$

Optimality Conditions of $\mathbf{P}(p)$

$$\begin{aligned} \nabla_x f(x,p) + \nabla_x c(x,p)\,\lambda - \nu &= 0 \\ c(x,p) &= 0 \\ XVe &= 0 \end{aligned}$$

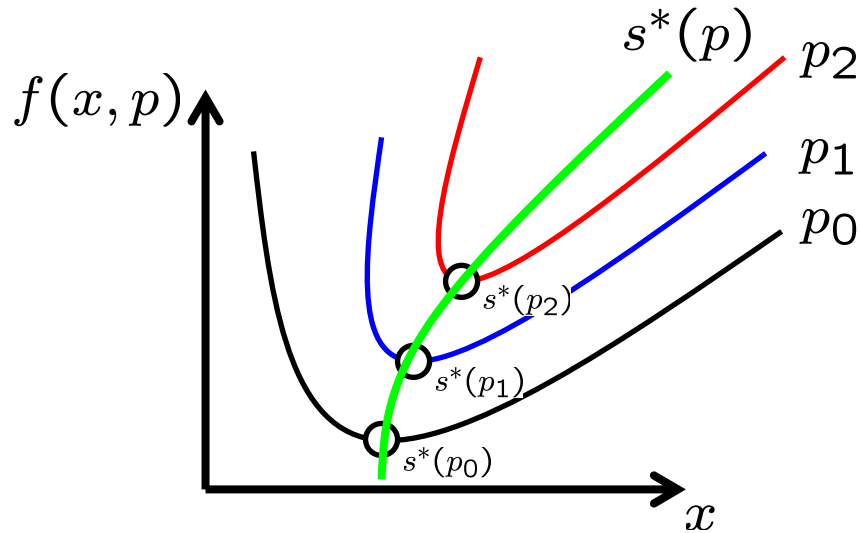

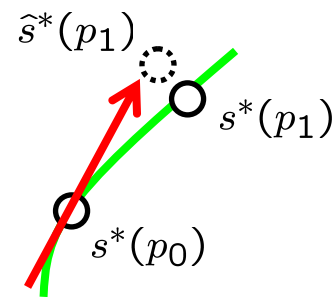

NLP Sensitivity - Existence and Differentiability of Path $s^*(p)$ - *Fiacco, 1983*

- **Main Idea: Obtain** $\hat{s}^*(p_1)$ **by First-Order Correction -** $O(||p - p_0||^2)$

- **Limitation: Approximations Preserve Active-Set**

Real-Time Nonlinear Model Predictive Control

Fast Feedback with NLP Sensitivity

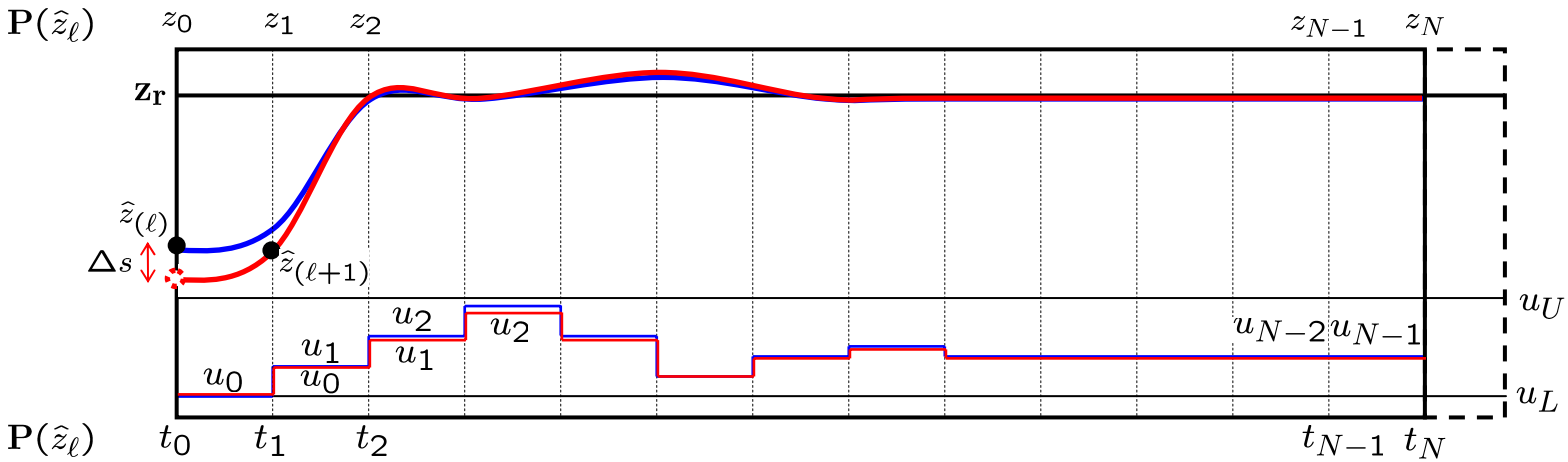

$$
\begin{aligned}
\min \quad & \sum_{m=0}^{M-1} \left\{ \sum_{k=0}^{K_m-1} \varphi_m^k \left(z_m^k, y_m^k, u_m^k, \pi_m, \Pi \right) \right\} \\
\text{s.t.} \quad & \\
z_m^{k+1} &= z_m^k + \mathbf{A}_m y_m^k \\
0 &= h_{m,k} \left(z_m^k, y_m^k, u_m^k, \pi_m, \Pi \right) \qquad \mathbf{P}(\hat{z}_\ell) \\
z_{m+1}^0 &= \bar{f}_m \left(z_m^{K_m}, y_m^{K_m}, u_m^{K_m} \right) \\
z_0^0 &= \hat{z}(\ell) \boxed{+\Delta s} \\
& \boxed{z_1 = \hat{z}(\ell+1)}
\end{aligned}
$$

KKT System at Solution of $\mathbf{P}(\hat{z}_\ell)$

$$
\begin{bmatrix} W(x_k, \lambda_k) & A(x_k) & -I \\ A(x_k)^T & 0 & 0 \\ V_k & 0 & X_k \end{bmatrix} \begin{bmatrix} \Delta x \\ \Delta \lambda \\ \Delta \nu \end{bmatrix} = \begin{bmatrix} 0 \\ 0 \\ 0 \end{bmatrix}
$$

$$
\mathbf{K} \Delta v = 0
$$

Augmented KKT System

$$
\left[\begin{array}{c|c} \mathbf{K} & \mathbf{E_0} \\ \hline \mathbf{E_1}^T & 0 \end{array} \right] \left[\begin{array}{c} \Delta v \\ \hline \Delta s \end{array} \right] = - \left[\begin{array}{c} 0 \\ \hline \hat{z}(\ell+1) - z_1^* \end{array} \right]
$$

Real-Time Nonlinear Model Predictive Control

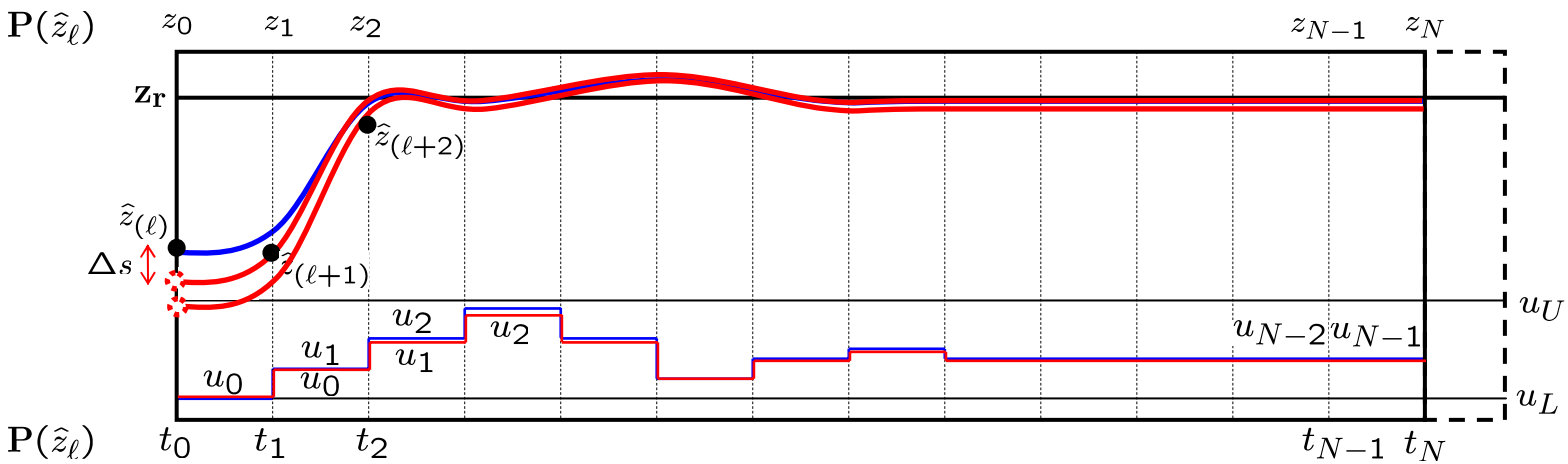

$$\left[\begin{array}{c|c} \mathbf{K} & \mathbf{E_0} \\ \hline \mathbf{E_2}^T & 0 \end{array}\right] \left[\begin{array}{c} \Delta v \\ \hline \Delta s \end{array}\right] = -\left[\begin{array}{c} 0 \\ \hline \hat{z}(\ell+2) - z_2^* \end{array}\right]$$

Schur Complement Technique

$$-(E_2^T \mathbf{K}^{-1} E_0)\Delta s = \hat{z}(\ell+2) - z_2^*$$

Obtain Approximate Solution

$$\mathbf{K}\Delta v = -\mathbf{E}_0 \Delta s$$

On-Line Calculation

Recursive Feedback Law

$$\Delta u_j = \mathbf{K}^{-1}\mathbf{M}_j\, \Delta z(\ell+j), \qquad j = 1, \ldots, m$$

Update Every m Sampling Times

Industrial Case Study

Industrial Case Study

Low-Density Polyethylene – Grade Transitions

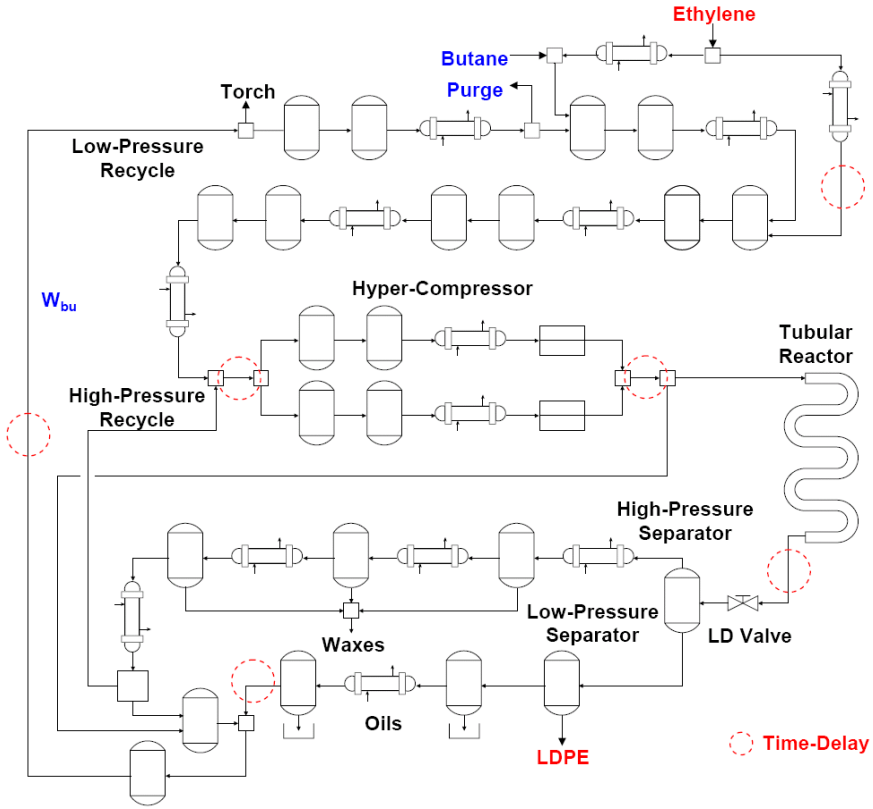

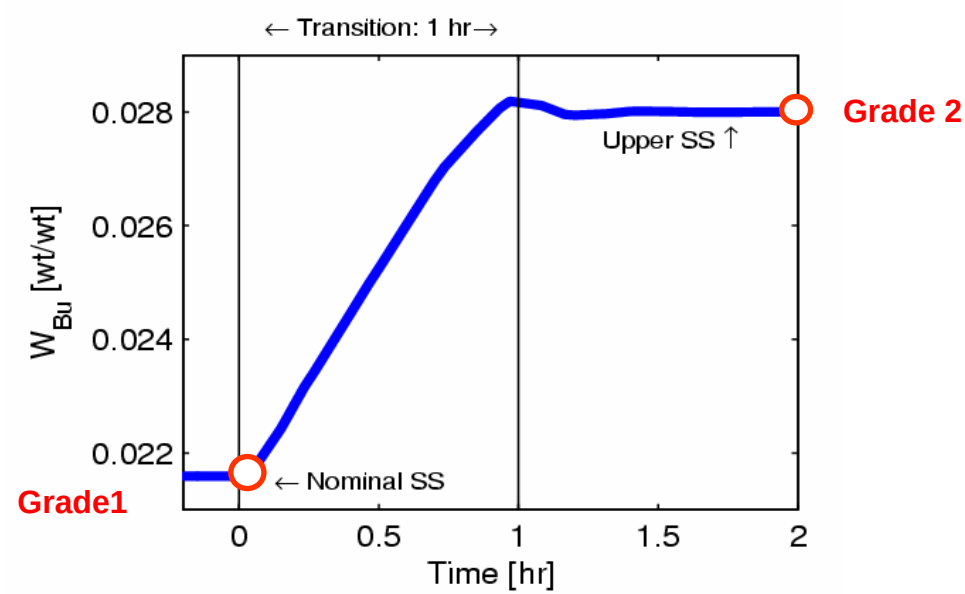

Industrial Case Study

Material Balances - ODEs

$$\frac{d\left(V_k \rho_k w_k^j\right)}{dt} = F_k\, w_{IN_k}^j - F_k w_k^j$$
$$k \in \{1..N_U\}$$
$$j \in \{1..N_C\}$$

Time Delays - PDEs

$$\frac{\partial w_i^j}{\partial t} + \frac{1}{\tau}\frac{\partial w_i^j}{\partial z} = 0$$
$$\left.\frac{\partial w_i^j}{dz}\right|_L = 0$$
$$w_i^j(z,0) = w_{0_i}^j$$
$$i \in \{1..N_T\}$$
$$j \in \{1..N_C\}$$

Discretize (in Space)

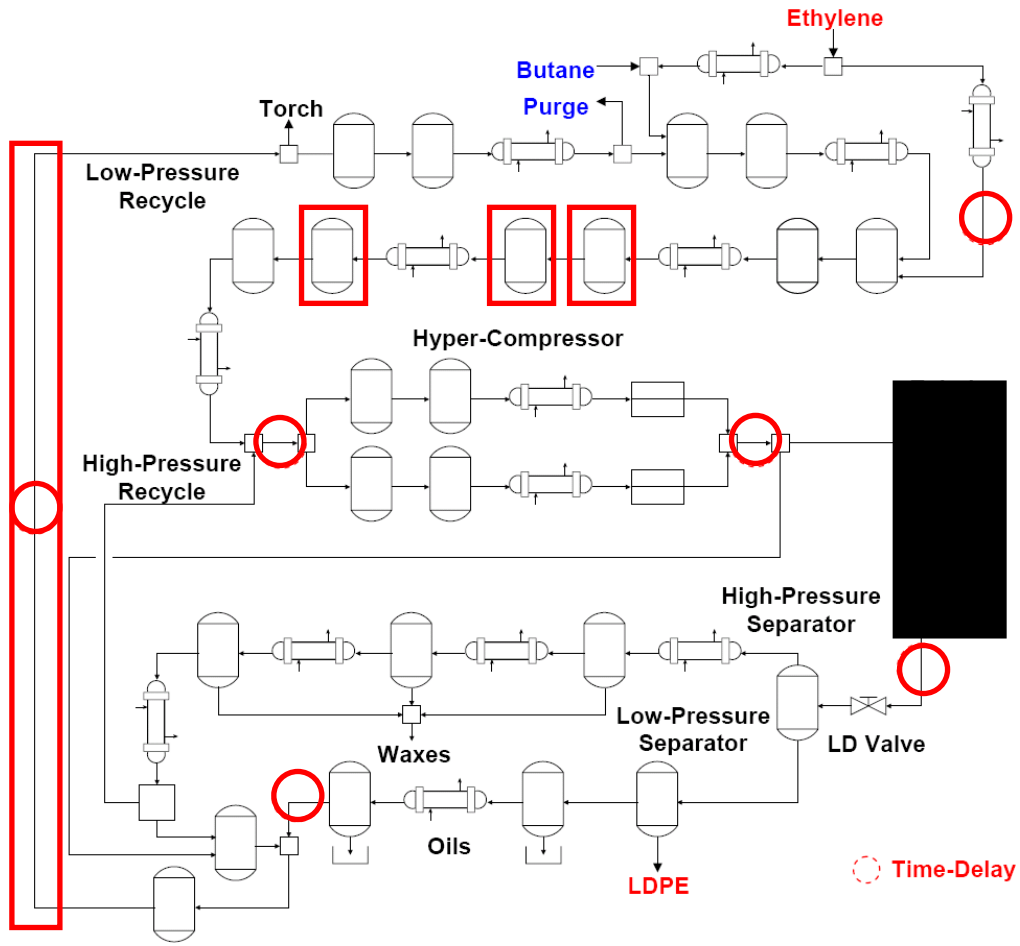

Dynamic Model

294 ODEs

100 AEs

Industrial Case Study

$$\min \int_{t_\ell}^{t_\ell+t_p} \left(w_{C_4}(t) - w_{C_4}^r\right)^2 + \left(F_{C_4}(t) - F_{C_4}^r\right)^2 + \left(F_{pu}(t) - F_{pu}^r\right)^2$$

s.t. DAEs

$$z(0) = \hat{z}(\ell)$$

$$z_L \le z \le z_U$$

$$y_L \le y \le y_U$$

$$u_L \le u \le u_U$$

Simultaneous Approach

$$\min \sum_{m=0}^{M-1} \left\{ \sum_{k=0}^{K_m-1} \varphi_m^k \left(z_m^k, y_m^k, u_m^k, \pi_m, \Pi\right) \right\}$$

s.t.

$$\begin{aligned} z_m^{k+1} &= z_m^k + \mathbf{A}_m y_m^k \\ 0 &= h_{m,k}\left(z_m^k, y_m^k, u_m^k, \pi_m, \Pi\right) \\ z_{m+1}^0 &= \bar{f}_m\left(z_m^{K_m}, y_m^{K_m}, u_m^{K_m}\right) \\ z_0^0 &= \hat{z}(\ell) \end{aligned}$$

27,135 constraints, 9630 Bounds

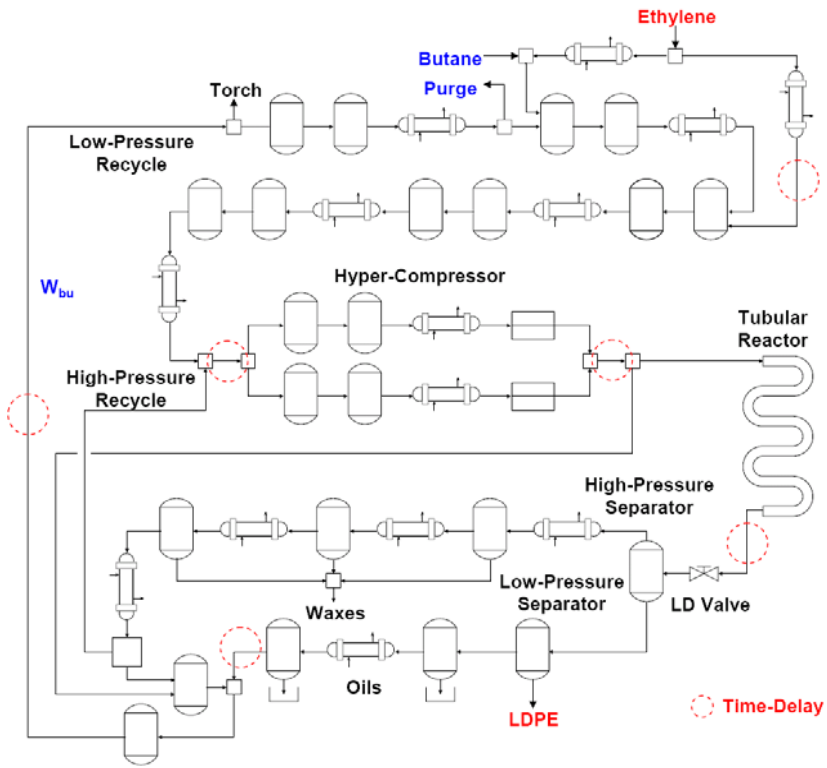

Algorithmic Step	CPU(s)
Full Solution (10 iterations)	351.5
Single Factorization of KKT Matrix	33.9
Step Computation (single backsolve)	0.94
Rest of Steps	0.12

Feedback Delay 6 min

Industrial Case Study

Optimal Feedback Policy → (On-line Computation 351 Seconds)

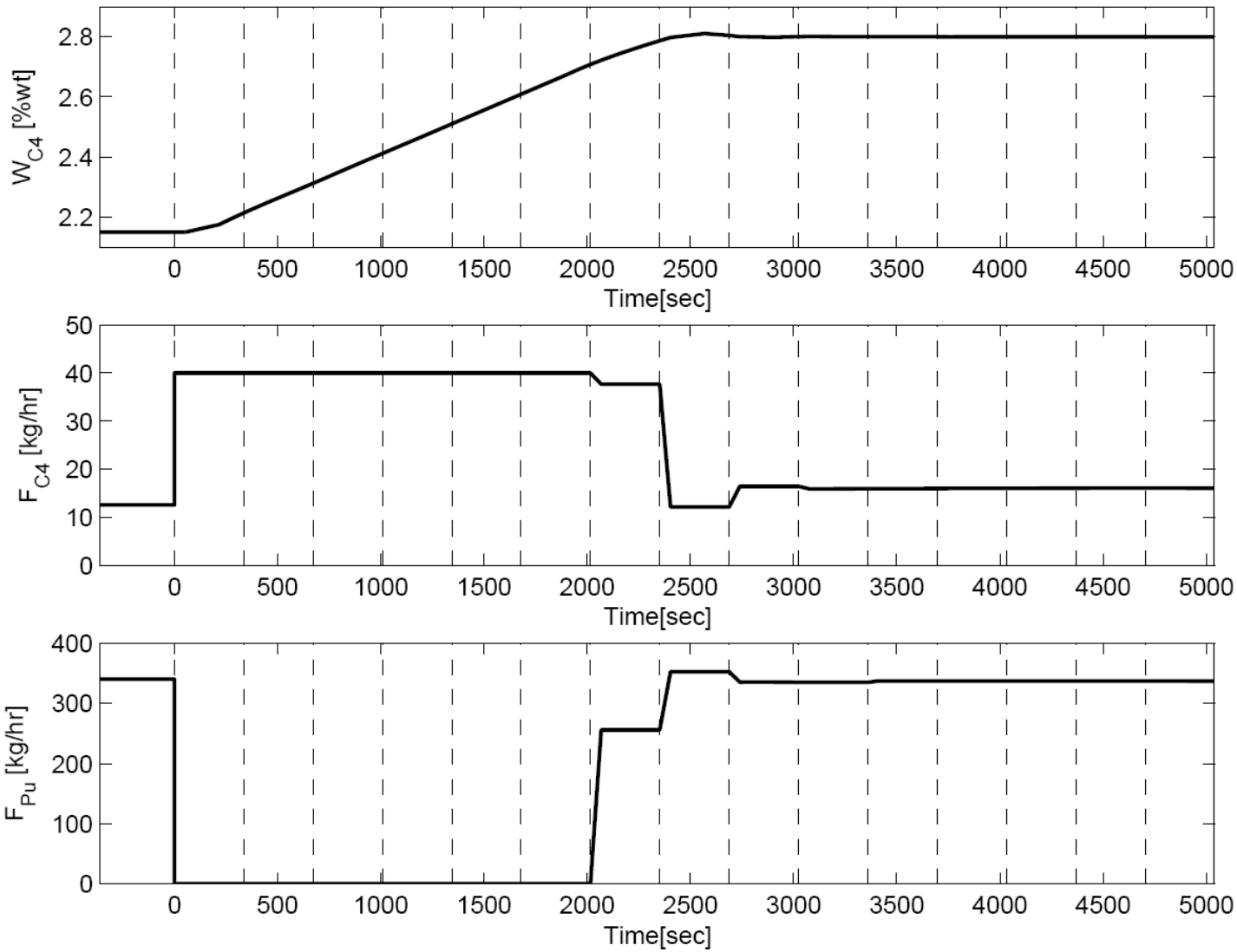

Plant-Model Mismatch – Add Random Perturbations on Time Delays

Industrial Case Study

Optimal Feedback Policy vs. Real-Time Approach → (On-line Computation 1.04 Seconds)

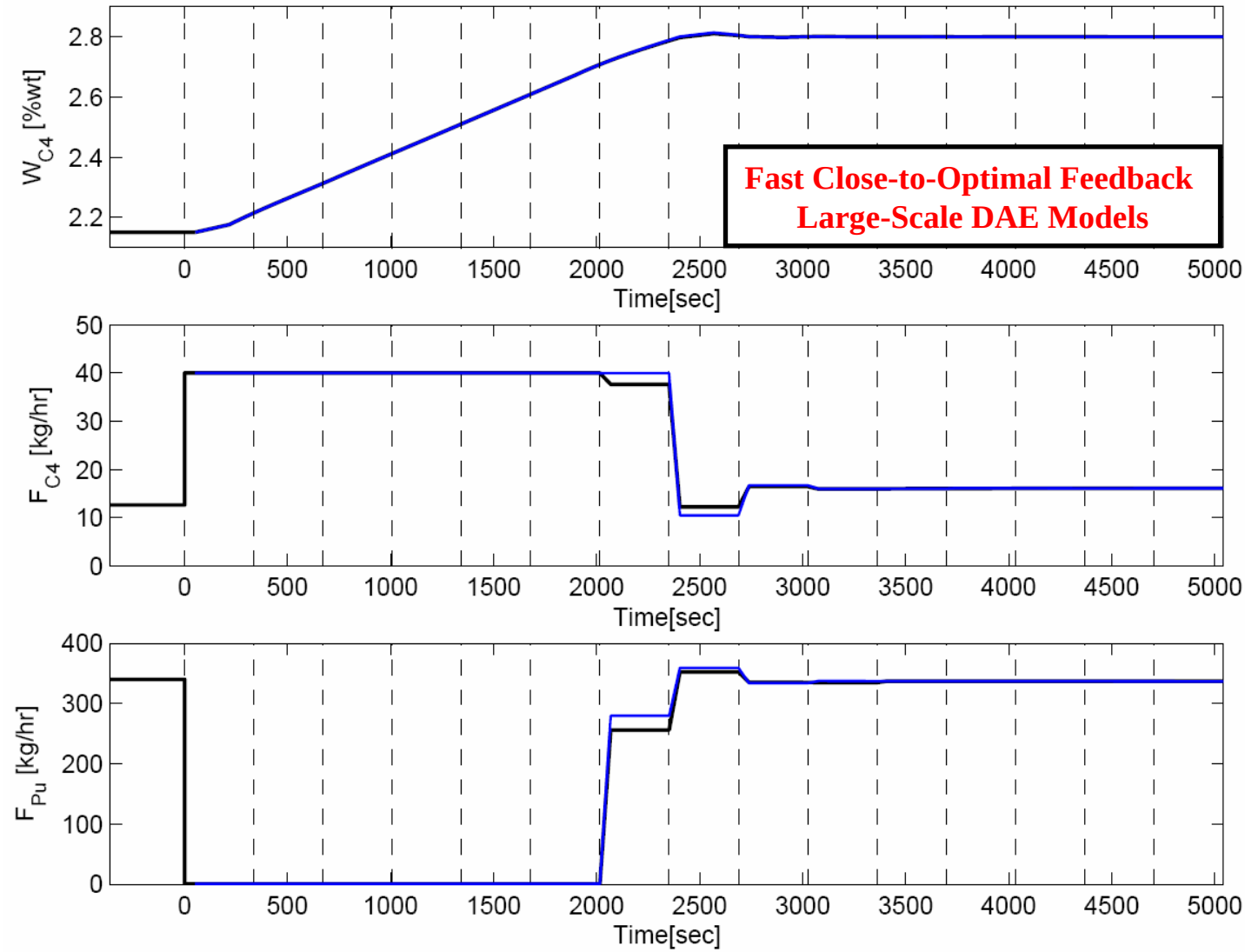

Industrial Case Study

Effect of NLP Sensitivity on Warm-Starts

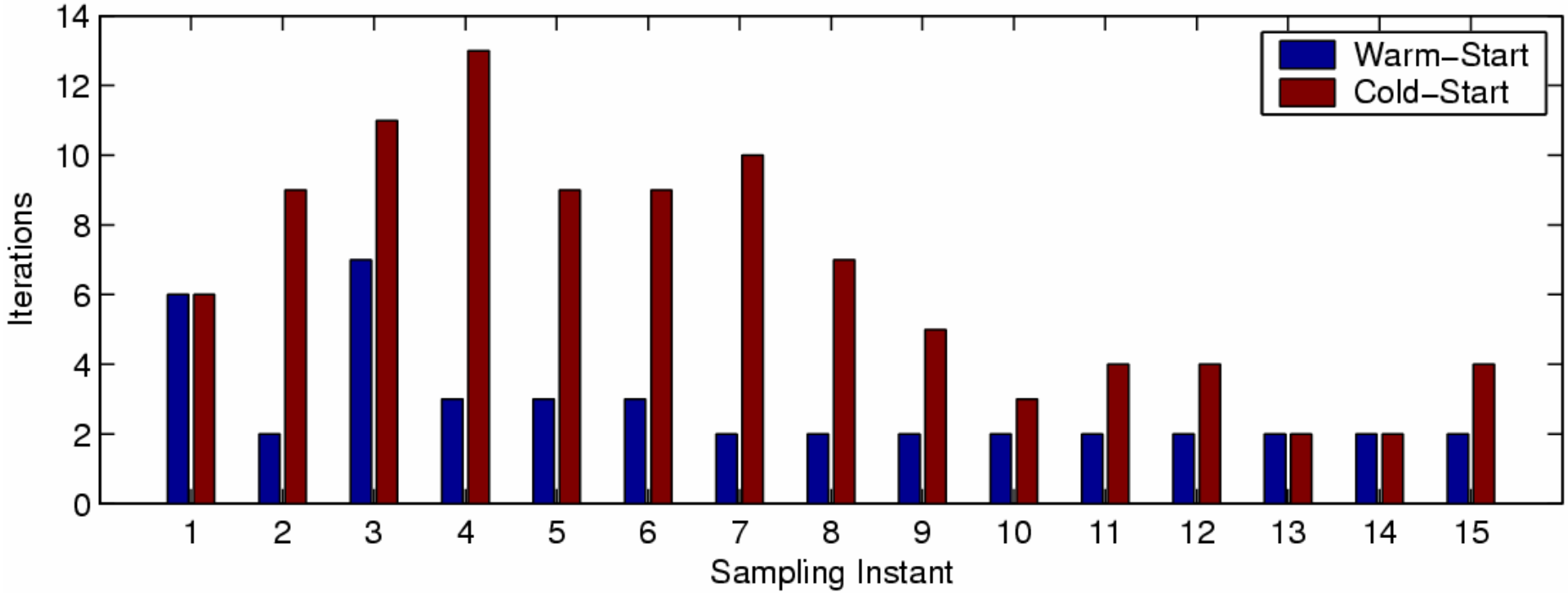

Conclusions and Future Work

Conclusions

Retain Detailed DAE Models – Consistency

Accommodate in Real-Time NMPC

Fast Computational Framework for Large-Scale NMPC

- **Simultaneous Collocation Approach**
- **Interior-Point Algorithms**
- **NLP Sensitivity**

Challenging LDPE Grade Transition Case Study

- **Fast Close-to-Optimal Feedback**

Future Work

Nominal Stability of Real-Time NMPC – *Diehl, et. al. (2004), Santos & Biegler (2001)*

Stronger Perturbations, Active-Set Changes – *Wright (2001), Gondzio (2002)*

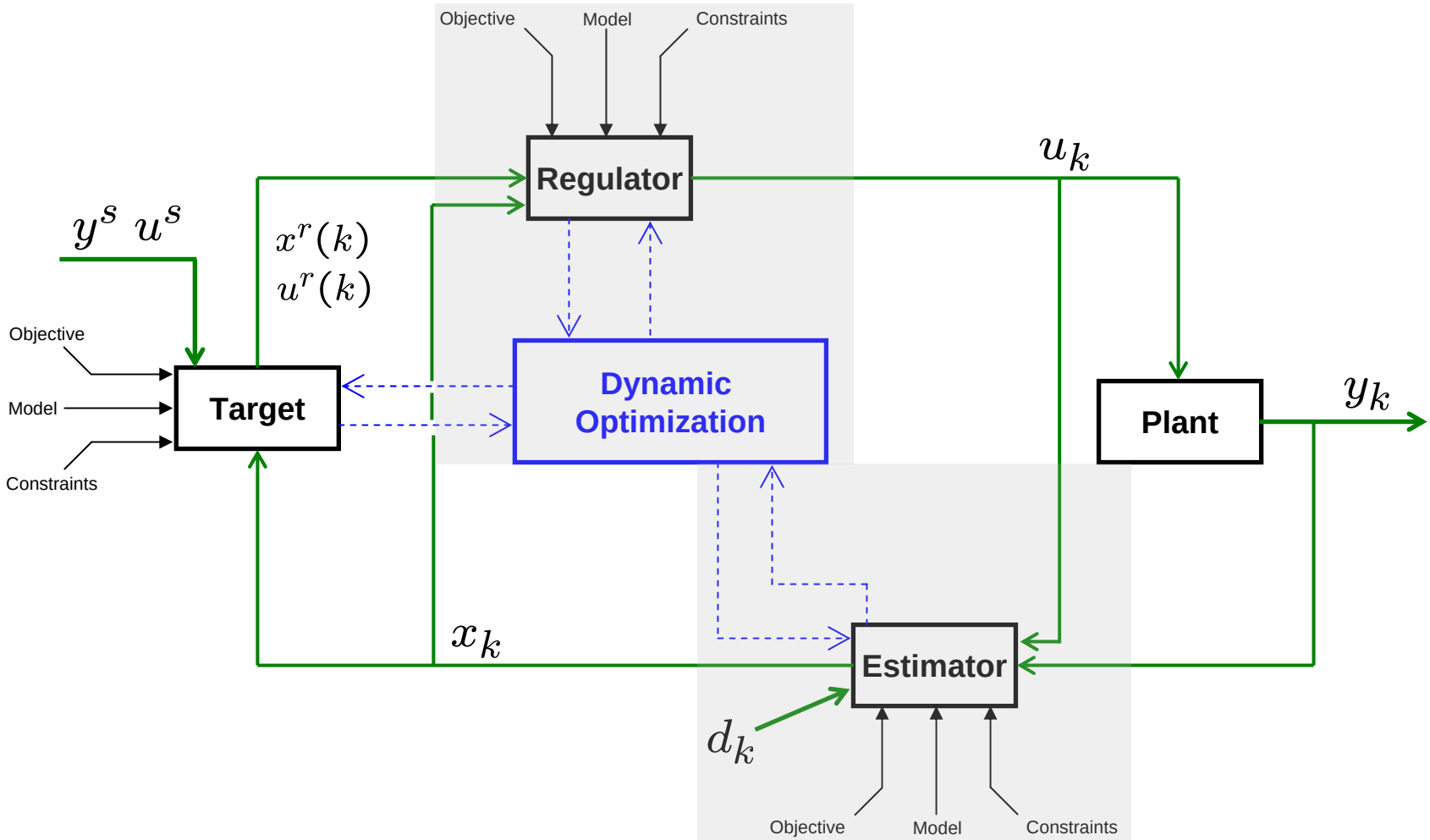

Real-Time Moving Horizon Estimation

Z & Biegler 2006 – Dycops 2007

Questions